Pixel Props Store

Ecto Goggles Light and Sound Kit

GB Fans Shell

Main Components

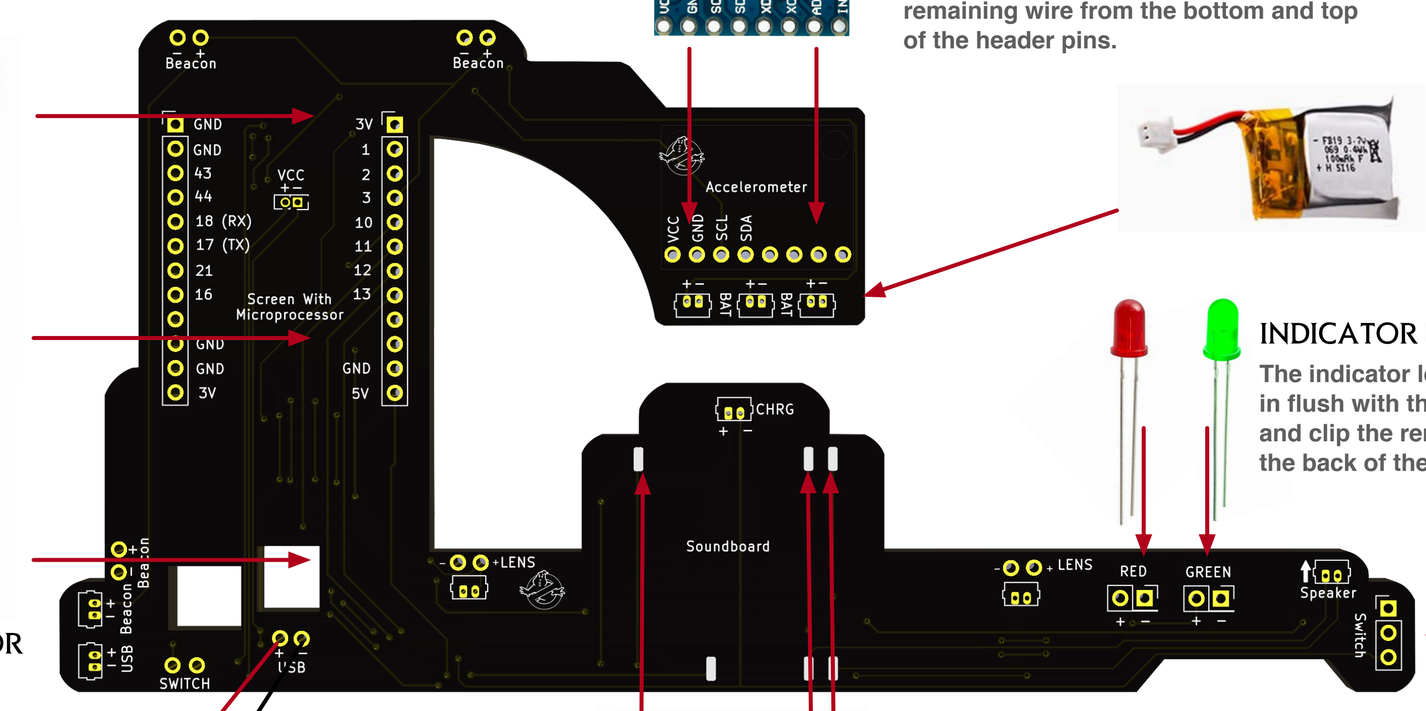

ACCELEROMETER

The accelerometer plugs directly into the using the supplied header pins. The first 4 pads that are used are marked. You can solder all of them but make sure the first 4 are absolutely soldered. Clip off all remaining wire from the bottom and top of the header pins.

BATTERY

There are three battery connectors beside the accelerometer

INDICATOR LEDS

The indicator leds plug all the way in flush with the PCB. Solder in place and clip the remaining lead wire off on the back of the PCB.

SCREEN & MICROPROCESSOR

The microprocessor can be connected directly using the header pins. Clip off the remaining pins on the back of the PCB once its soldered into place.

USB PCB

Solder wires to the PCB and USB PCB. + goes to VCC and - goes to GND. Keep the wire short and plug the PCB into the microprocessor once its installed.

SOUNDBOARD

The soundboard is meant to be soldered directly to the PCB. You'll need to line up the pads to the corresponding spots and solder them. The bottom three pads must also be soldered. Pay attention to the orientation of the soundboard before soldering.

POWER SWITCH

The power switch plugs directly into place. Make sure that the toggle is sticking out of the top of the 3d printed insert and works properly. Solder into place and clip off excess wire on the back.

Secondary Components

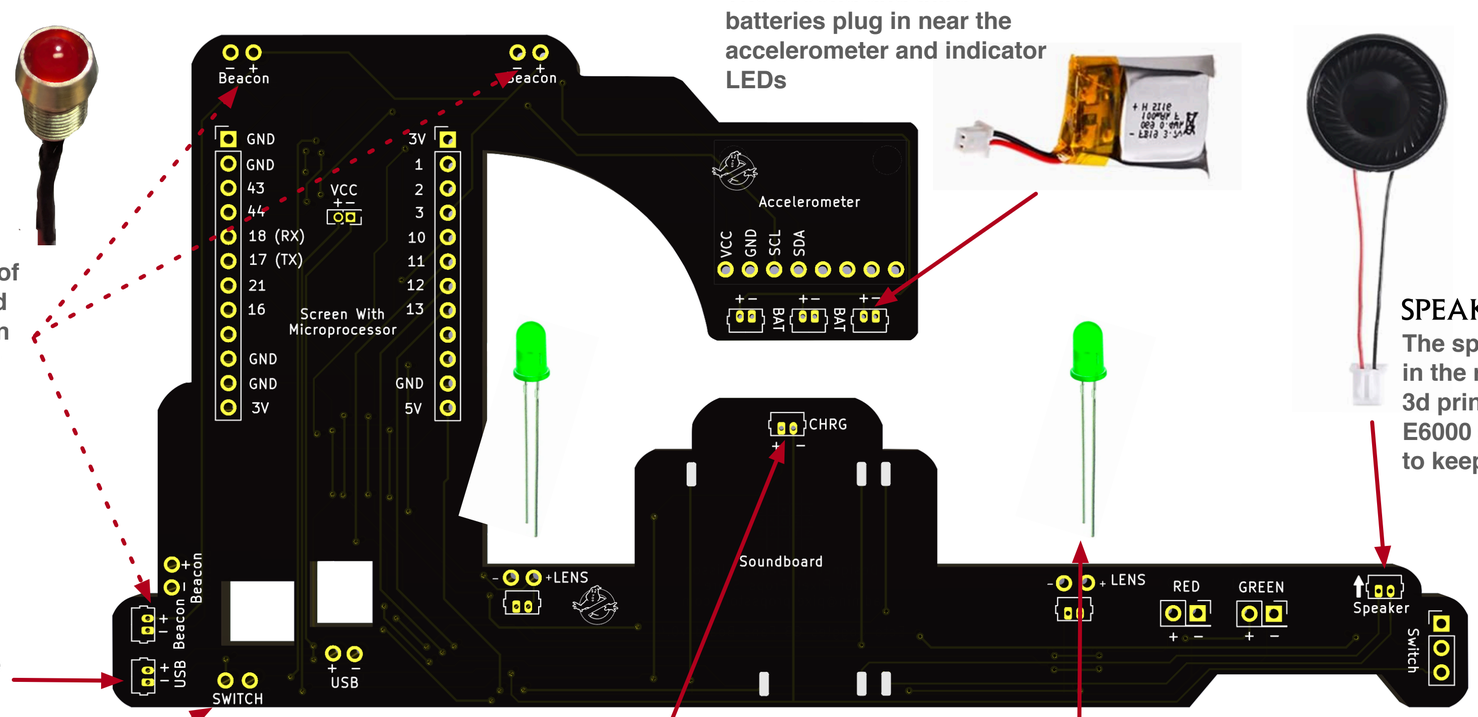

BATTERIES

The second and third batteries plug in near the accelerometer and indicator LEDs

BEACON LED (optional)

The beacon LED goes on the outside of the goggle frames and can be plugged in at four different points dependng on where you want it on the outside your frames. You can use the connector or simply solder into place.

SPEAKER

The speaker plugs in and sits in the round cutout in the 3d printed insert. Put a dab of E6000 glue on the edge of it to keep in place.

USB CONNECTOR (optional)

Connect a USB battery pack to run the goggles electronics. Accepts 5 volts.

External Switch (optional)

You can use this to connect to an external switch of your choosing.

CHARGING PORT

The supplied USB connector cable is used to charge the batteries. Accepts up to 5 volts.

LENS LEDS

The lens LEDs need longer wires on them to feed into the goggle lens. Keep the leads long and solder to the corresponding pads. Then bend the leads into the position you prefer.